Superior Clamping and Gripping

Product Information

Universal swivel head SRH-plus-D

Fast. Robust. High Performance.

Universal swivel head SRH-plus-D

Swivel head for simultaneous loading and unloading of workpieces with integrated fluid and electrical feed-through

Field of application

used for loading and unloading of tooling machines

Advantages – Your benefits

Complete module with integrated fluid and electric feed-through eliminating unnecessary interfering contours

High damper performance due to the use of hydraulic shock absorbers this results in a significant reduction of wear and shorter loading times

Pre-assembled mounting kit for direct mounting of the inductive proximity switches

Media feed-through and drive connection via screw connection or hoseless direct connection possible for flexibility in all automation solutions

Sizes	Weight	Torque	Repeat accuracy	Angle of rotation
Quantity: 7	2.2 .. 21.2 kg	3 .. 69.9 Nm	0.05°	180°

Functional description

When subjected to pressure, the two pneumatic pistons move their end faces in a straight line in their respective bores thus turning the pinion by means of the serrations on their sides.

The pinion is firmly connected to the drive head, and feeds through compressed air and electrical signals.

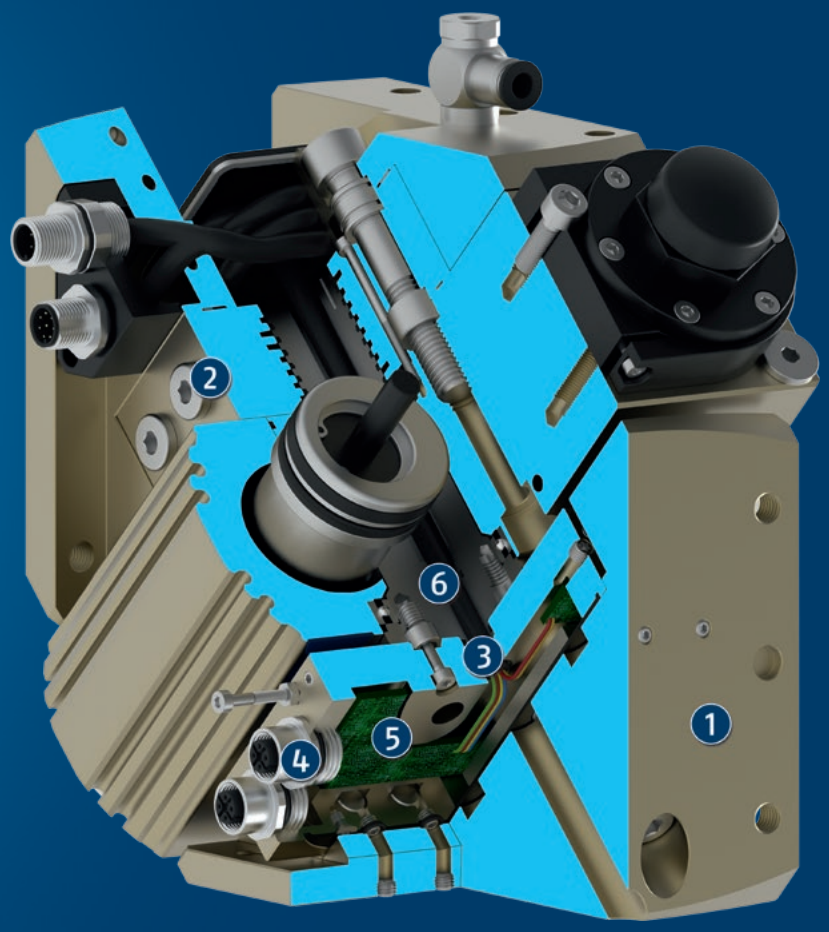

① **Output side**
for fastening end actuators such as grippers

② **Media feed-through MDF**
guided up to the screw-on surfaces of the swivel head

③ **Electrical feed-through EDF**
completely integrated, for sensor, acuator signal, and energy transmission

④ **Connectors**
for the use of the integrated electric feed-through

⑤ **Distributor board**
for bundling the input lines

⑥ **Drive principle of pinions and racks**
for powerful swiveling and a robust and reliable module

General notes about the series

Standard conditions: The technical data shown refers to an environment of 20 °C and atmospheric pressure.

Housing material: Aluminum alloy, anodized

Actuation: pneumatic, with filtered compressed air as per ISO 8573-1:2010 [7:4:4].

Operating principle: Double piston rack and pinion principle

Scope of delivery: Centering sleeves, O-rings for direct connection, assembly and operating manual with manufacturer's declaration

Warranty: 24 months

Service life characteristics: on request

Repeat accuracy: is defined as a distribution of the end position for 100 consecutive cycles.

Customized angle of rotation: More swivel angles are available on request.

Torque in the end positions: Please note that the final angular degrees (approx. 2°) before the end position can only be approached using the force of a single drive piston. For this reason, double actuated modules only have about half the rated torque available in this area. An external stop can be used to provide the full torque even in the end positions.

Swiveling time: is the rotation time of pinion/flange around the nominal rotation angle. Valve switching times, hose filling times, or PLC reaction times are not included and are to be considered when cycle times are calculated.

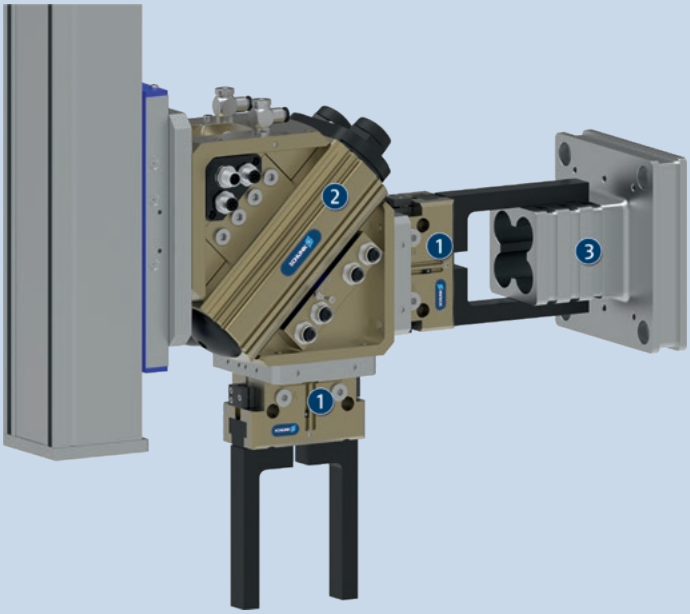

Application example

Swivel head with double parallel gripper for simultaneous loading and unloading of workpieces in a machine.

1. 2-finger parallel gripper JGP with workpiece-specific gripper fingers
2. Swivel head SRH-plus-D
3. Workpiece

SCHUNK offers more ...

The following components make the product even more productive – the suitable addition for the highest functionality, flexibility, reliability, and controlled production.

Universal gripper

Universal gripper

Angular gripper

Linear module

Fastened with screws

Inductive proximity switches

Pressure maintenance valve

Line gantry

ⓘ For more information on these products can be found on the following product pages or at schunk.com.

Options and special information

For particularly damping-intensive rotary movements, additional, external shock absorbers can be fitted. Please ask for details.
Please note that suitable emergency stop scenarios (e.g. controlled shut down) and restarting scenarios (e.g. pressure build-up valves, appropriate valve switching sequences) are needed for all pneumatic actuators.
Cutting off the pressure in an uncontrolled manner could lead to undefined states and behavior.

SRH-plus-D 20

Universal swivel head

Max. admissible inertia J

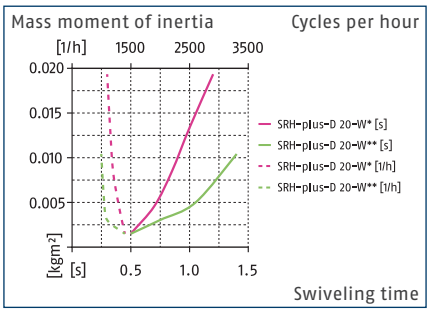

ⓘ The diagrams are valid for applications with a symmetrical design (*) to the swivel axis: one-sided centrically arranged to one mounting face (**), and with an operating pressure of 6 bar. The mass moment of inertia always refers to the swiveling axis. The cycle times can be adjusted via throttling and adjustment of the shock absorber's stroke. Otherwise the lifetime may reduce. On request, we are glad to assist you in designing other applications. Please contact us.

Dimensions and maximum loads

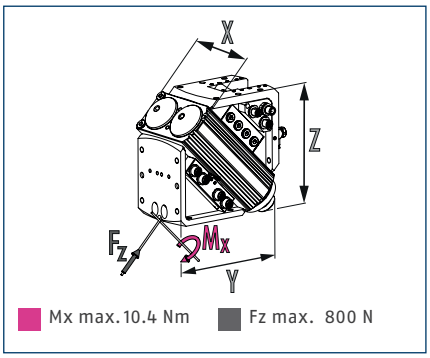

ⓘ The indicated moments and forces are statical values and may appear simultaneously. Throttling has to be done for ensuring that the rotary movement takes place without impact or bouncing. Otherwise the service life reduces.

Technical data

Description		SRH-plus-D 20-W-M8-AS
ID		1393104
Angle of rotation	[°]	180.0
End position adjustability	[°]	3.0
Torque	[Nm]	3
IP protection class		67
Weight	[kg]	2.2
Fluid consumption (2x nom. angle)	[cm³]	60.0
Swivel time without a payload	[s]	0.5
Min./nom./max. operating pressure	[bar]	3/6/8
Diameter of connecting hose		6 x 3.9 x 1.05
No. of fluid feed-throughs		4
Max. pressure fluid feed-through	[bar]	8
Min./max. ambient temperature	[°C]	5/60
Repeat accuracy	[°]	0.05
No. of E-fittings on the output end		4
Size of the E-connections on the output end		M8
Max. voltage	[V]	24
Max. current per wire	[A]	1
Max. current	[A]	1
Dimensions X x Y x Z	[mm]	76 x 125.4 x 125.4

ⓘ All units are also available in an FKM version. Please contact us for details.

Main view

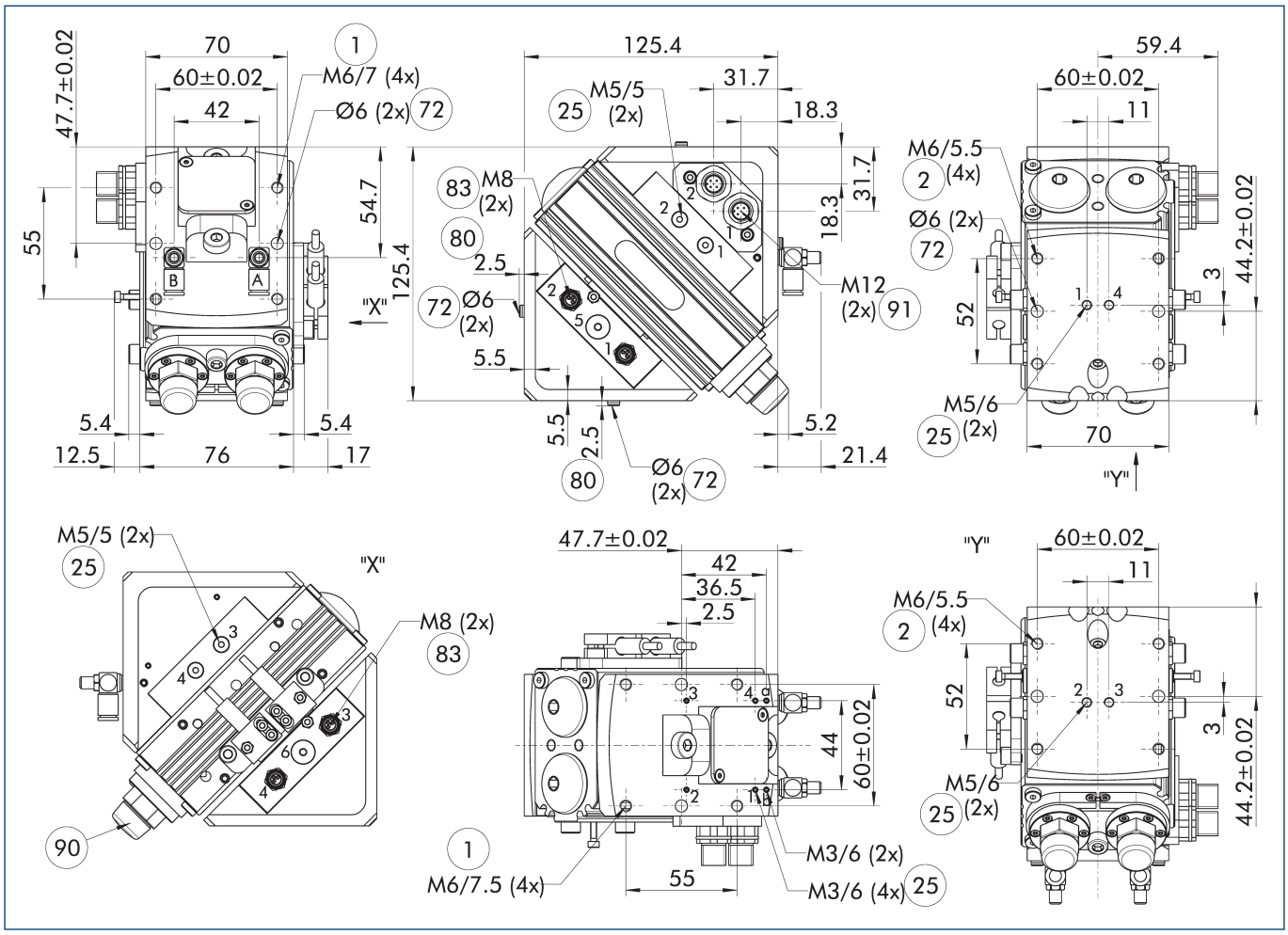

The main view shows the SRH-plus-D swivel head in the left end position (0°) and turns 180° clockwise. (when viewing the output side)

ⓘ The SDV-P pressure maintenance valve can be used to maintain the position in the case of a loss of pressure (see "Accessories" catalog section).

A, a Main / direct connection, rotary actuator rotates clockwise

B, b Main / direct connection, rotary actuator rotates counterclockwise

(1) Connection swivel unit

(2) Attachment connection

(25) Fluid feed-through

(72) Fit for centering sleeves

(80) Depth of the centering sleeve hole in the counter part

(83) Input for 3 pole sensor feed-through

(90) Cover caps

(91) Output for a 4-pin sensor feed-through

One-sided loading

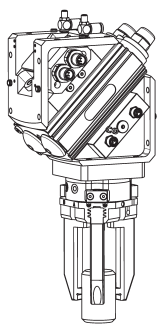

Two-sided loading

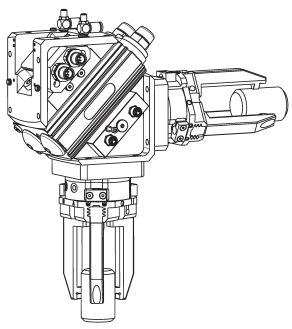

Hose-free direct connection M3

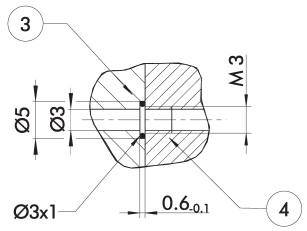

(3) Adapter (4) Rotary unit

The direct connection is used for supplying compressed air without hoses. Instead, the pressure medium is fed through bore-holes in the mounting plate.

Hose-free direct connection M5

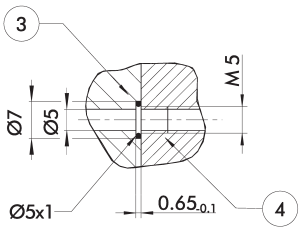

(3) Adapter (4) Rotary unit

The direct connection is used for supplying compressed air without hoses. Instead, the pressure medium is fed through bore-holes in the mounting plate.

Inductive proximity switches

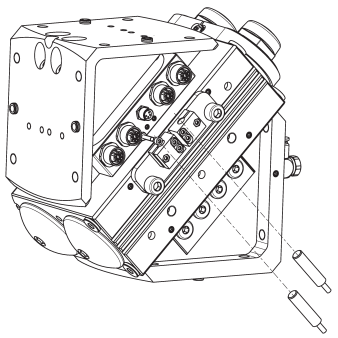

Description	ID	Often combined
Inductive proximity switches		
IN 80-S-M12	0301578	
IN 80-S-M8	0301478	●
IN-C 80-S-M8-PNP	0301475	
INK 80-S	0301550	
INK 80-SL	0301579	
Inductive proximity switch with lateral cable outlet		
IN 80-S-M12-SA	0301587	
IN 80-S-M8-SA	0301483	●
INK 80-S-SA	0301566	
Connection cables		
KA BG08-L 3P-0300-PNP	0301622	●
KA BG08-L 3P-0500-PNP	0301623	
KA BG12-L 3P-0500-PNP	30016369	
KA BW08-L 3P-0300-PNP	0301594	
KA BW08-L 3P-0500-PNP	0301502	
KA BW12-L 3P-0300-PNP	0301503	
KA BW12-L 3P-0500-PNP	0301507	
clip for plug/socket		
CLI-M12	0301464	
CLI-M8	0301463	
Cable extension		
KV BG12-SG12 3P-0030-PNP	0301999	
KV BG12-SG12 3P-0060-PNP	0301998	
KV BW08-SG08 3P-0030-PNP	0301495	
KV BW08-SG08 3P-0100-PNP	0301496	
KV BW08-SG08 3P-0200-PNP	0301497	●
KV BW12-SG12 3P-0030-PNP	0301595	
KV BW12-SG12 3P-0100-PNP	0301596	
KV BW12-SG12 3P-0200-PNP	0301597	
Sensor distributor		
V2-M12	0301776	●
V2-M8	0301775	●
V4-M8	0301746	
V8-M8	0301751	

ⓘ Two sensors (closer/S) are required for each swivel head. On option, extension cables are required.

SRH-plus-D 25

Universal swivel head

Max. admissible inertia J

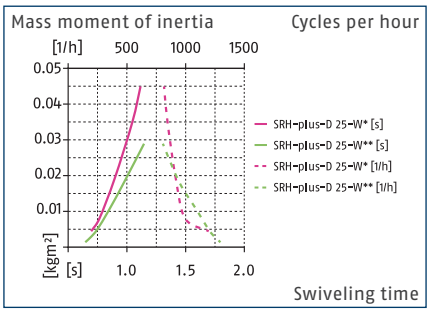

ⓘ The diagrams are valid for applications with a symmetrical design (*) to the swivel axis: one-sided centrically arranged to one mounting face (**), and with an operating pressure of 6 bar. The mass moment of inertia always refers to the swiveling axis. The cycle times can be adjusted via throttling and adjustment of the shock absorber's stroke. Otherwise the lifetime may reduce. On request, we are glad to assist you in designing other applications. Please contact us.

Dimensions and maximum loads

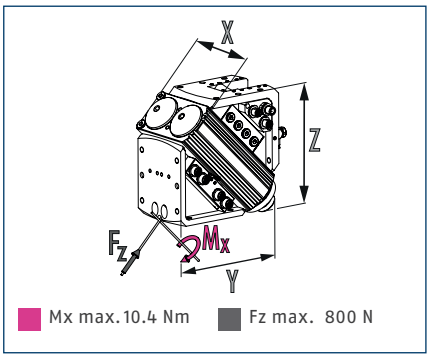

ⓘ The indicated moments and forces are statical values and may appear simultaneously. Throttling has to be done for ensuring that the rotary movement takes place without impact or bouncing. Otherwise the service life reduces.

Technical data

Description		SRH-plus-D 25-W-M8-AS
ID		1407400
Angle of rotation	[°]	180.0
End position adjustability	[°]	3.0
Torque	[Nm]	4.6
IP protection class		67
Weight	[kg]	2.6
Fluid consumption (2x nom. angle)	[cm³]	88.0
Swivel time without a payload	[s]	0.7
Min./nom./max. operating pressure	[bar]	3/6/8
Diameter of connecting hose		6 x 3.9 x 1.05
No. of fluid feed-throughs		4
Max. pressure fluid feed-through	[bar]	8
Min./max. ambient temperature	[°C]	5/60
Repeat accuracy	[°]	0.05
No. of E-fittings on the output end		4
Size of the E-connections on the output end		M8
Max. voltage	[V]	24
Max. current per wire	[A]	1
Max. current	[A]	1
Dimensions X x Y x Z	[mm]	86 x 131 x 131

ⓘ All units are also available in an FKM version. Please contact us for details.

Main view

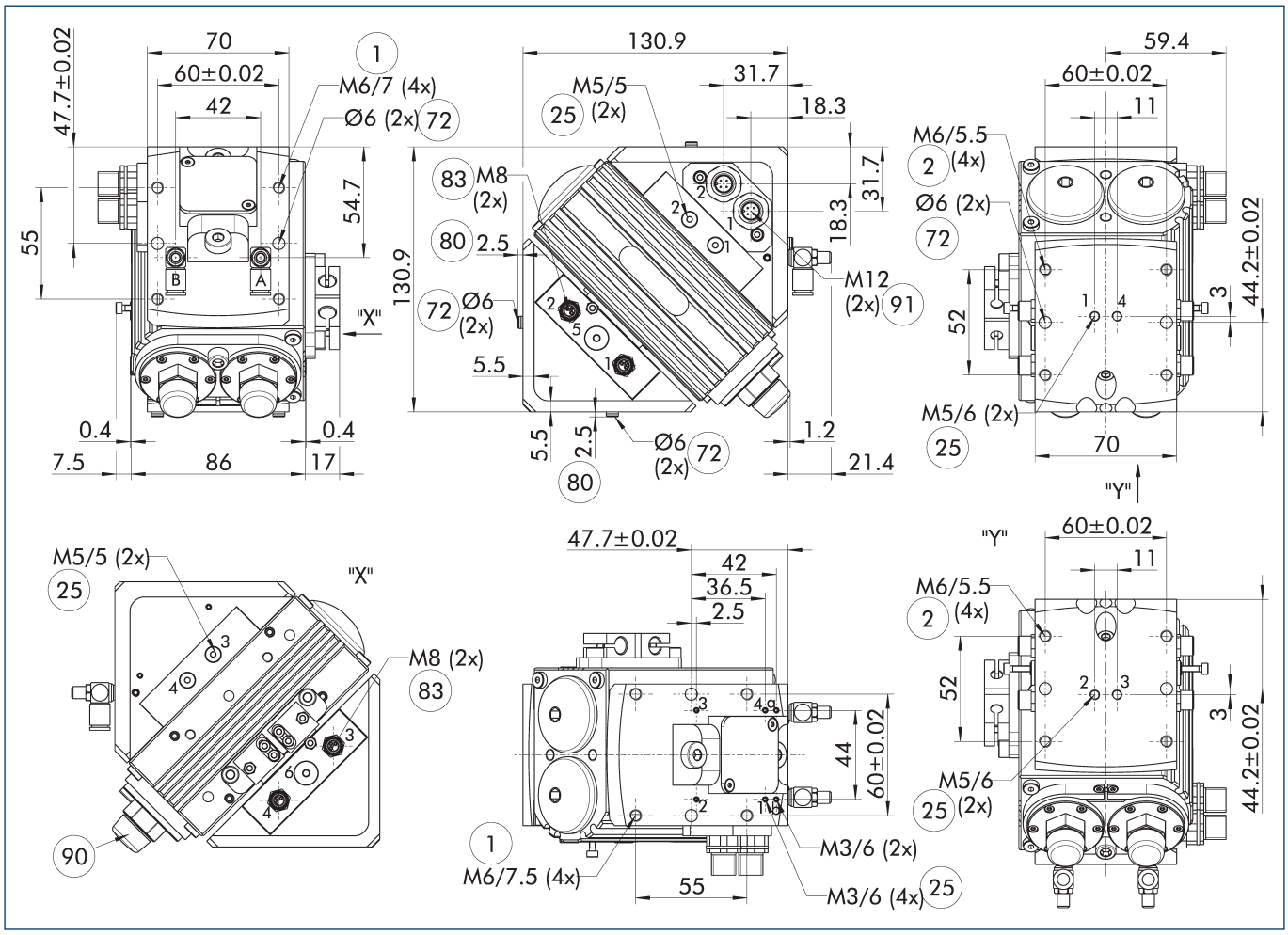

The main view shows the SRH-plus-D swivel head in the left end position (0°) and turns 180° clockwise. (when viewing the output side)

ⓘ The SDV-P pressure maintenance valve can be used to maintain the position in the case of a loss of pressure (see "Accessories" catalog section).

A, a Main / direct connection, rotary actuator rotates clockwise

B, b Main / direct connection, rotary actuator rotates counterclockwise

(1) Connection swivel unit

(2) Attachment connection

(25) Fluid feed-through

(72) Fit for centering sleeves

(80) Depth of the centering sleeve hole in the counter part

(83) Input for 3 pole sensor feed-through

(90) Cover caps

(91) Output for a 4-pin sensor feed-through

One-sided loading

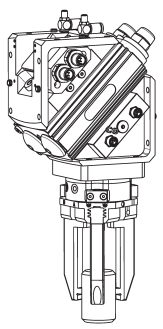

Two-sided loading

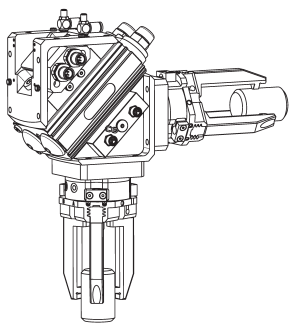

Hose-free direct connection M3

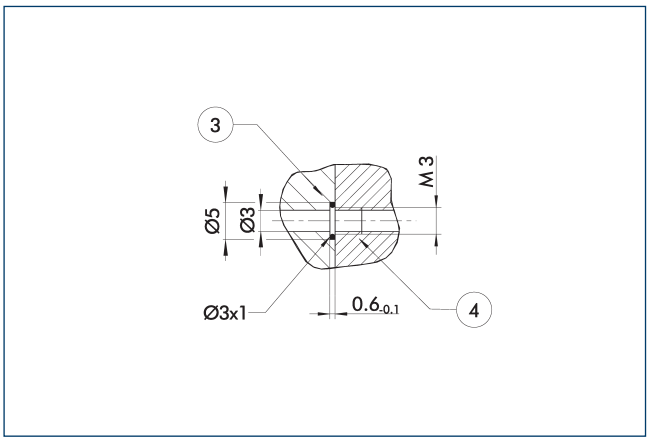

(3) Adapter (4) Rotary unit

The direct connection is used for supplying compressed air without hoses. Instead, the pressure medium is fed through bore-holes in the mounting plate.

Hose-free direct connection M5

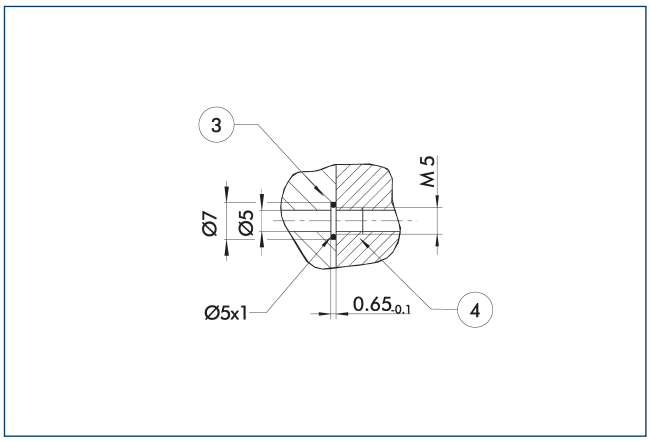

(3) Adapter (4) Rotary unit

The direct connection is used for supplying compressed air without hoses. Instead, the pressure medium is fed through bore-holes in the mounting plate.

Inductive proximity switches

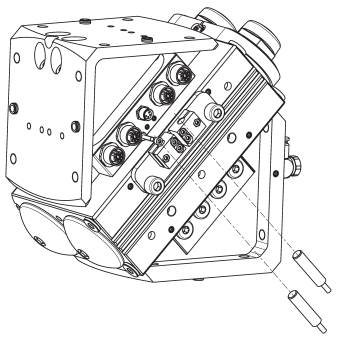

Description	ID	Often combined
Inductive proximity switches		
IN 80-S-M12	0301578	
IN 80-S-M8	0301478	●
IN-C 80-S-M8-PNP	0301475	
INK 80-S	0301550	
INK 80-SL	0301579	
Inductive proximity switch with lateral cable outlet		
IN 80-S-M12-SA	0301587	
IN 80-S-M8-SA	0301483	●
INK 80-S-SA	0301566	
Connection cables		
KA BG08-L 3P-0300-PNP	0301622	●
KA BG08-L 3P-0500-PNP	0301623	
KA BG12-L 3P-0500-PNP	30016369	
KA BW08-L 3P-0300-PNP	0301594	
KA BW08-L 3P-0500-PNP	0301502	
KA BW12-L 3P-0300-PNP	0301503	
KA BW12-L 3P-0500-PNP	0301507	
clip for plug/socket		
CLI-M12	0301464	
CLI-M8	0301463	
Cable extension		
KV BG12-SG12 3P-0030-PNP	0301999	
KV BG12-SG12 3P-0060-PNP	0301998	
KV BW08-SG08 3P-0030-PNP	0301495	
KV BW08-SG08 3P-0100-PNP	0301496	
KV BW08-SG08 3P-0200-PNP	0301497	●
KV BW12-SG12 3P-0030-PNP	0301595	
KV BW12-SG12 3P-0100-PNP	0301596	
KV BW12-SG12 3P-0200-PNP	0301597	
Sensor distributor		
V2-M12	0301776	●
V2-M8	0301775	●
V4-M8	0301746	
V8-M8	0301751	

ⓘ Two sensors (closer/S) are required for each swivel head. On option, extension cables are required.

SRH-plus-D 30

Universal swivel head

Max. admissible inertia J

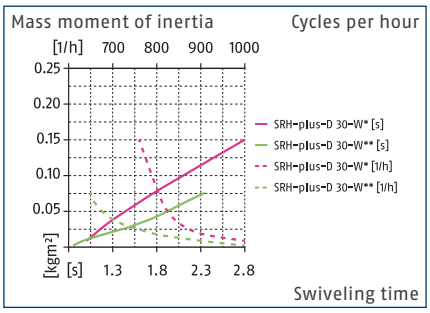

ⓘ The diagrams are valid for applications with a symmetrical design (*) to the swivel axis: one-sided centrically arranged to one mounting face (**), and with an operating pressure of 6 bar. The mass moment of inertia always refers to the swiveling axis. The cycle times can be adjusted via throttling and adjustment of the shock absorber's stroke. Otherwise the lifetime may reduce. On request, we are glad to assist you in designing other applications. Please contact us.

Dimensions and maximum loads

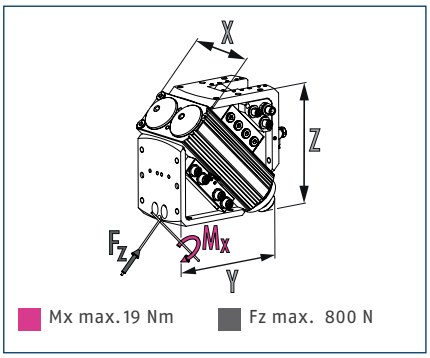

ⓘ The indicated moments and forces are statical values and may appear simultaneously. Throttling has to be done for ensuring that the rotary movement takes place without impact or bouncing. Otherwise the service life reduces.

Technical data

Description		SRH-plus-D 30-W-M8-AS
ID		1407403
Angle of rotation	[°]	180.0
End position adjustability	[°]	3.0
Torque	[Nm]	9.5
IP protection class		67
Weight	[kg]	4.5
Fluid consumption (2x nom. angle)	[cm³]	145.0
Swivel time without a payload	[s]	0.9
Min./nom./max. operating pressure	[bar]	3/6/8
Diameter of connecting hose		6 x 3.9 x 1.05
No. of fluid feed-throughs		4
Max. pressure fluid feed-through	[bar]	8
Min./max. ambient temperature	[°C]	5/60
Repeat accuracy	[°]	0.05
No. of E-fittings on the output end		4
Size of the E-connections on the output end		M8
Max. voltage	[V]	24
Max. current per wire	[A]	1
Max. current	[A]	1
Dimensions X x Y x Z	[mm]	96 x 144 x 144

ⓘ All units are also available in an FKM version. Please contact us for details.

Main view

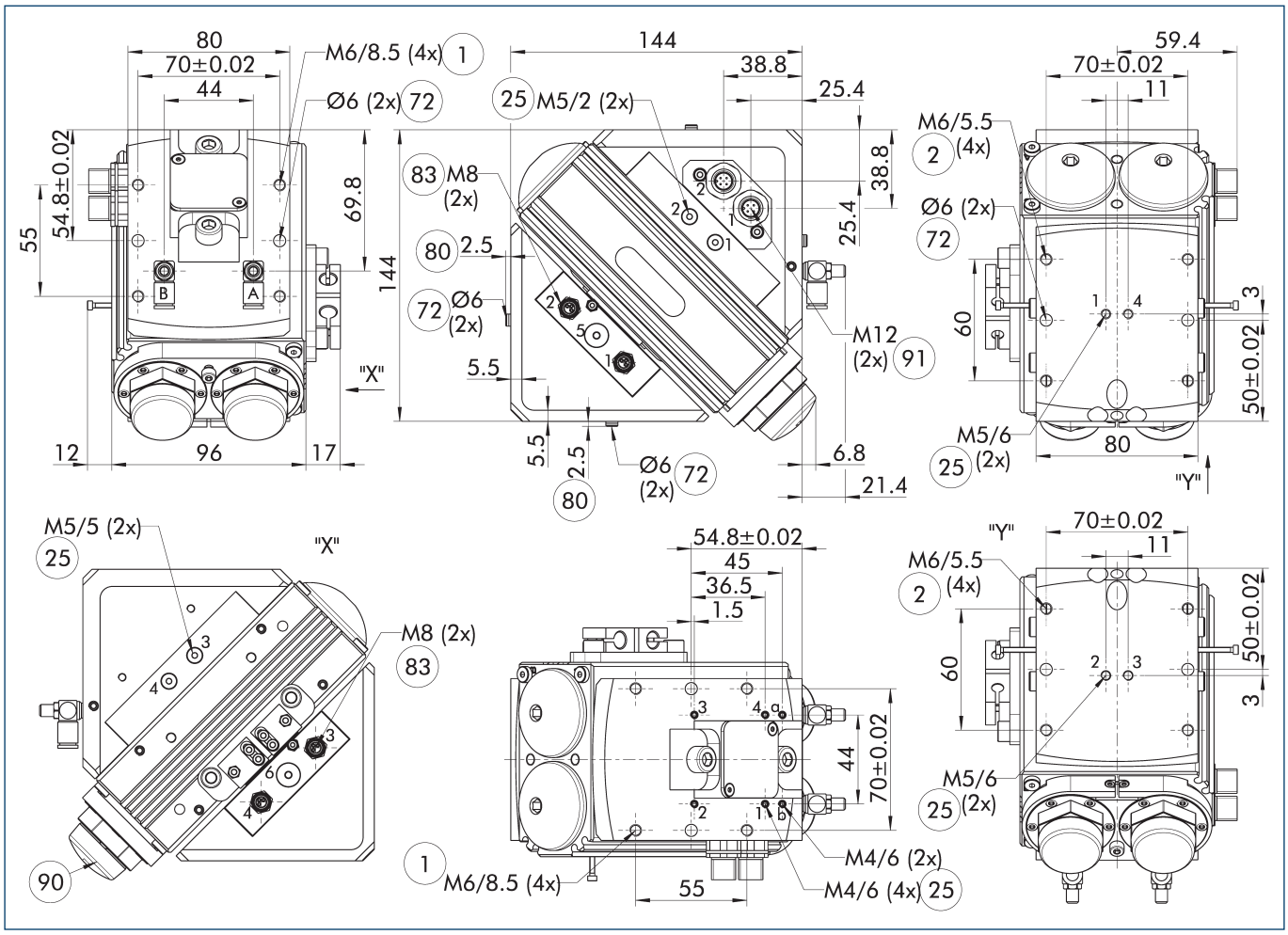

The main view shows the SRH-plus-D swivel head in the left end position (0°) and turns 180° clockwise. (when viewing the output side)

ⓘ The SDV-P pressure maintenance valve can be used to maintain the position in the case of a loss of pressure (see "Accessories" catalog section).

A, a Main / direct connection, rotary actuator rotates clockwise

B, b Main / direct connection, rotary actuator rotates counterclockwise

(1) Connection swivel unit

(2) Attachment connection

(25) Fluid feed-through

(72) Fit for centering sleeves

(80) Depth of the centering sleeve hole in the counter part

(83) Input for 3 pole sensor feed-through

(90) Cover caps

(91) Output for a 4-pin sensor feed-through

One-sided loading

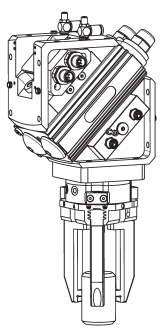

Two-sided loading

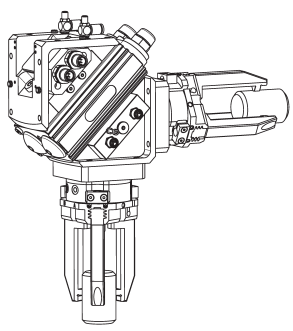

SRH-plus-D 30

Universal swivel head

Hose-free direct connection M5

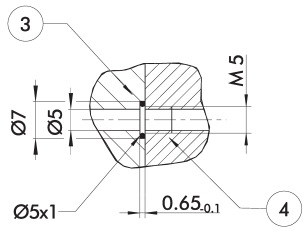

③ Adapter ④ Rotary unit

The direct connection is used for supplying compressed air without hoses. Instead, the pressure medium is fed through bore-holes in the mounting plate.

Inductive proximity switches

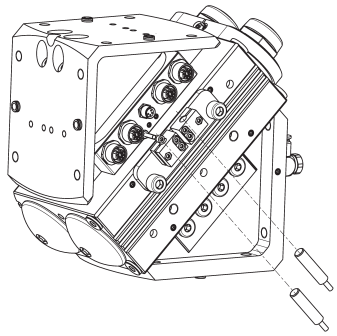

Description	ID	Often combined
Inductive proximity switches		
IN 80-S-M12	0301578	
IN 80-S-M8	0301478	●
IN-C 80-S-M8-PNP	0301475	
INK 80-S	0301550	
INK 80-SL	0301579	
Inductive proximity switch with lateral cable outlet		
IN 80-S-M12-SA	0301587	
IN 80-S-M8-SA	0301483	●
INK 80-S-SA	0301566	
Connection cables		
KA BG08-L 3P-0300-PNP	0301622	●
KA BG08-L 3P-0500-PNP	0301623	
KA BG12-L 3P-0500-PNP	30016369	
KA BW08-L 3P-0300-PNP	0301594	
KA BW08-L 3P-0500-PNP	0301502	
KA BW12-L 3P-0300-PNP	0301503	
KA BW12-L 3P-0500-PNP	0301507	
clip for plug/socket		
CLI-M12	0301464	
CLI-M8	0301463	
Cable extension		
KV BG12-SG12 3P-0030-PNP	0301999	
KV BG12-SG12 3P-0060-PNP	0301998	
KV BW08-SG08 3P-0030-PNP	0301495	
KV BW08-SG08 3P-0100-PNP	0301496	
KV BW08-SG08 3P-0200-PNP	0301497	●
KV BW12-SG12 3P-0030-PNP	0301595	
KV BW12-SG12 3P-0100-PNP	0301596	
KV BW12-SG12 3P-0200-PNP	0301597	
Sensor distributor		
V2-M12	0301776	●
V2-M8	0301775	●
V4-M8	0301746	
V8-M8	0301751	

ⓘ Two sensors (closer/S) are required for each swivel head. On option, extension cables are required.

SRH-plus-D 35

Universal swivel head

Max. admissible inertia J

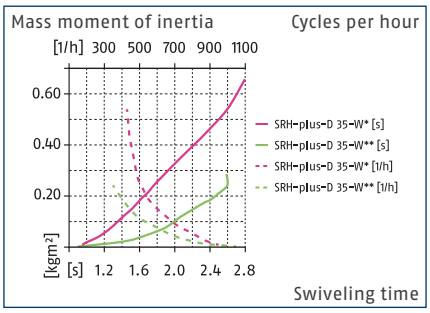

ⓘ The diagrams are valid for applications with a symmetrical design (*) to the swivel axis: one-sided centrically arranged to one mounting face (**), and with an operating pressure of 6 bar. The mass moment of inertia always refers to the swiveling axis. The cycle times can be adjusted via throttling and adjustment of the shock absorber's stroke. Otherwise the lifetime may reduce. On request, we are glad to assist you in designing other applications. Please contact us.

Dimensions and maximum loads

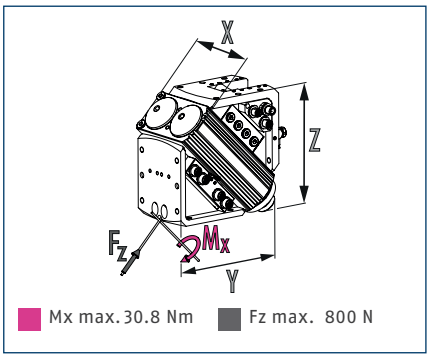

ⓘ The indicated moments and forces are statical values and may appear simultaneously. Throttling has to be done for ensuring that the rotary movement takes place without impact or bouncing. Otherwise the service life reduces.

Technical data

Description		SRH-plus-D 35-W-M8-AS
ID		1407404
Angle of rotation	[°]	180.0
End position adjustability	[°]	3.0
Torque	[Nm]	13.3
IP protection class		67
Weight	[kg]	4.3
Fluid consumption (2x nom. angle)	[cm³]	216.0
Swivel time without a payload	[s]	0.9
Min./nom./max. operating pressure	[bar]	3/6/8
Diameter of connecting hose		6 x 3.9 x 1.05
No. of fluid feed-throughs		4
Max. pressure fluid feed-through	[bar]	8
Min./max. ambient temperature	[°C]	5/60
Repeat accuracy	[°]	0.05
No. of E-fittings on the output end		4
Size of the E-connections on the output end		M8
Max. voltage	[V]	24
Max. current per wire	[A]	1
Max. current	[A]	1
Dimensions X x Y x Z	[mm]	107 x 150.4 x 150.1

ⓘ All units are also available in an FKM version. Please contact us for details.

Main view

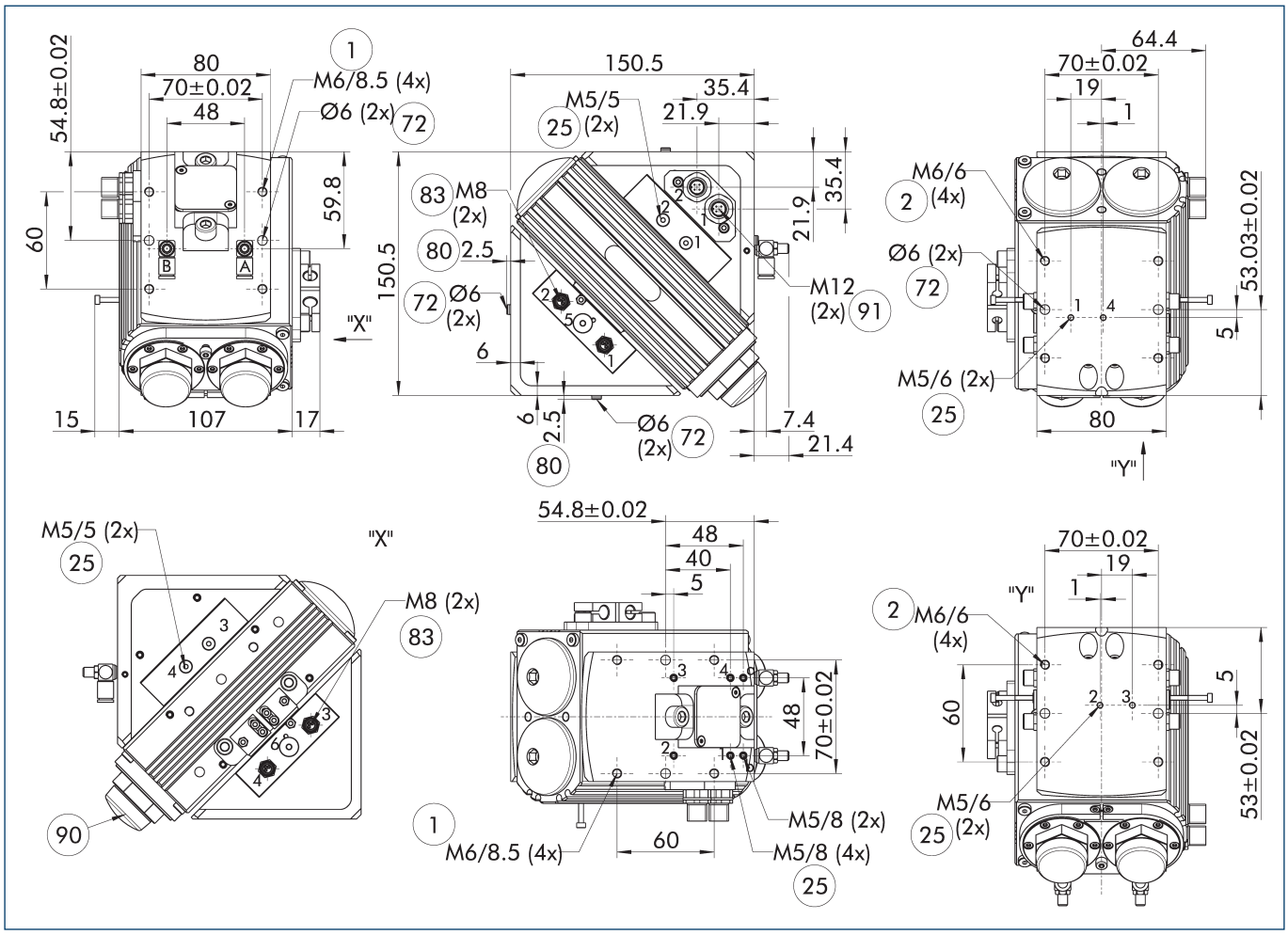

The main view shows the SRH-plus-D swivel head in the left end position (0°) and turns 180° clockwise. (when viewing the output side)

ⓘ The SDV-P pressure maintenance valve can be used to maintain the position in the case of a loss of pressure (see "Accessories" catalog section).

A, a Main / direct connection, rotary actuator rotates clockwise

B, b Main / direct connection, rotary actuator rotates counterclockwise

(1) Connection swivel unit

(2) Attachment connection

(27) Fastening groove for T-nuts

(72) Fit for centering sleeves

(80) Depth of the centering sleeve hole in the counter part

(83) Input for 3 pole sensor feed-through

(90) Cover caps

(91) Output for a 4-pin sensor feed-through

One-sided loading

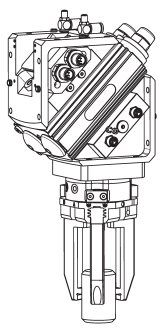

Two-sided loading

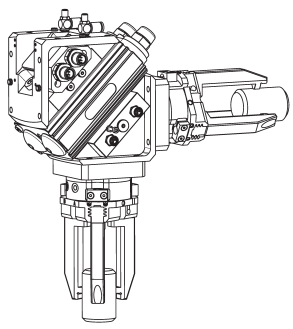

SRH-plus-D 35

Universal swivel head

Hose-free direct connection M5

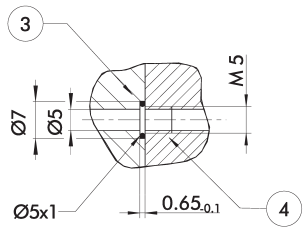

(3) Adapter (4) Rotary unit

The direct connection is used for supplying compressed air without hoses. Instead, the pressure medium is fed through bore-holes in the mounting plate.

Inductive proximity switches

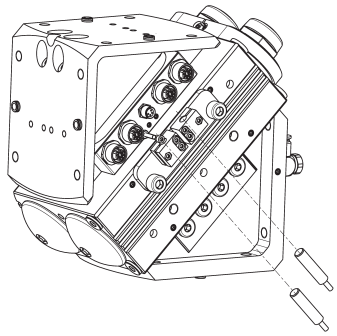

Description	ID	Often combined
Inductive proximity switches		
IN 80-S-M12	0301578	
IN 80-S-M8	0301478	●
IN-C 80-S-M8-PNP	0301475	
INK 80-S	0301550	
INK 80-SL	0301579	
Inductive proximity switch with lateral cable outlet		
IN 80-S-M12-SA	0301587	
IN 80-S-M8-SA	0301483	●
INK 80-S-SA	0301566	
Connection cables		
KA BG08-L 3P-0300-PNP	0301622	●
KA BG08-L 3P-0500-PNP	0301623	
KA BG12-L 3P-0500-PNP	30016369	
KA BW08-L 3P-0300-PNP	0301594	
KA BW08-L 3P-0500-PNP	0301502	
KA BW12-L 3P-0300-PNP	0301503	
KA BW12-L 3P-0500-PNP	0301507	
clip for plug/socket		
CLI-M12	0301464	
CLI-M8	0301463	
Cable extension		
KV BG12-SG12 3P-0030-PNP	0301999	
KV BG12-SG12 3P-0060-PNP	0301998	
KV BW08-SG08 3P-0030-PNP	0301495	
KV BW08-SG08 3P-0100-PNP	0301496	
KV BW08-SG08 3P-0200-PNP	0301497	●
KV BW12-SG12 3P-0030-PNP	0301595	
KV BW12-SG12 3P-0100-PNP	0301596	
KV BW12-SG12 3P-0200-PNP	0301597	
Sensor distributor		
V2-M12	0301776	●
V2-M8	0301775	●
V4-M8	0301746	
V8-M8	0301751	

ⓘ Two sensors (closer/S) are required for each swivel head. On option, extension cables are required.

SRH-plus-D 40

Universal swivel head

Max. admissible inertia J

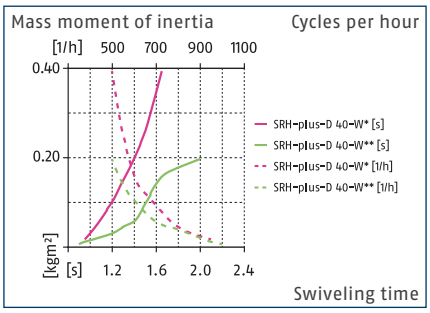

ⓘ The diagrams are valid for applications with a symmetrical design (*) to the swivel axis: one-sided centrically arranged to one mounting face (**), and with an operating pressure of 6 bar. The mass moment of inertia always refers to the swiveling axis. The cycle times can be adjusted via throttling and adjustment of the shock absorber's stroke. Otherwise the lifetime may reduce. On request, we are glad to assist you in designing other applications. Please contact us.

Dimensions and maximum loads

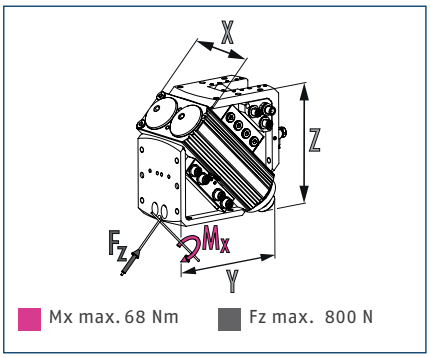

ⓘ The indicated moments and forces are statical values and may appear simultaneously. Throttling has to be done for ensuring that the rotary movement takes place without impact or bouncing. Otherwise the service life reduces.

Technical data

Description		SRH-plus-D 40-W-M8-AS
ID		1393112
Angle of rotation	[°]	180.0
End position adjustability	[°]	3.0
Torque	[Nm]	19.1
IP protection class		67
Weight	[kg]	6.9
Fluid consumption (2x nom. angle)	[cm³]	336.0
Swivel time without a payload	[s]	0.9
Min./nom./max. operating pressure	[bar]	3/6/8
Diameter of connecting hose		6 x 3.9 x 1.05
No. of fluid feed-throughs		8
Max. pressure fluid feed-through	[bar]	8
Min./max. ambient temperature	[°C]	5/60
Repeat accuracy	[°]	0.05
No. of E-fittings on the output end		9
Size of the E-connections on the output end		M8/M12
Max. voltage	[V]	24
Max. current per wire	[A]	1
Max. current	[A]	1
Dimensions X x Y x Z	[mm]	121 x 178.3 x 178.3

ⓘ All units are also available in an FKM version. Please contact us for details.

Main view

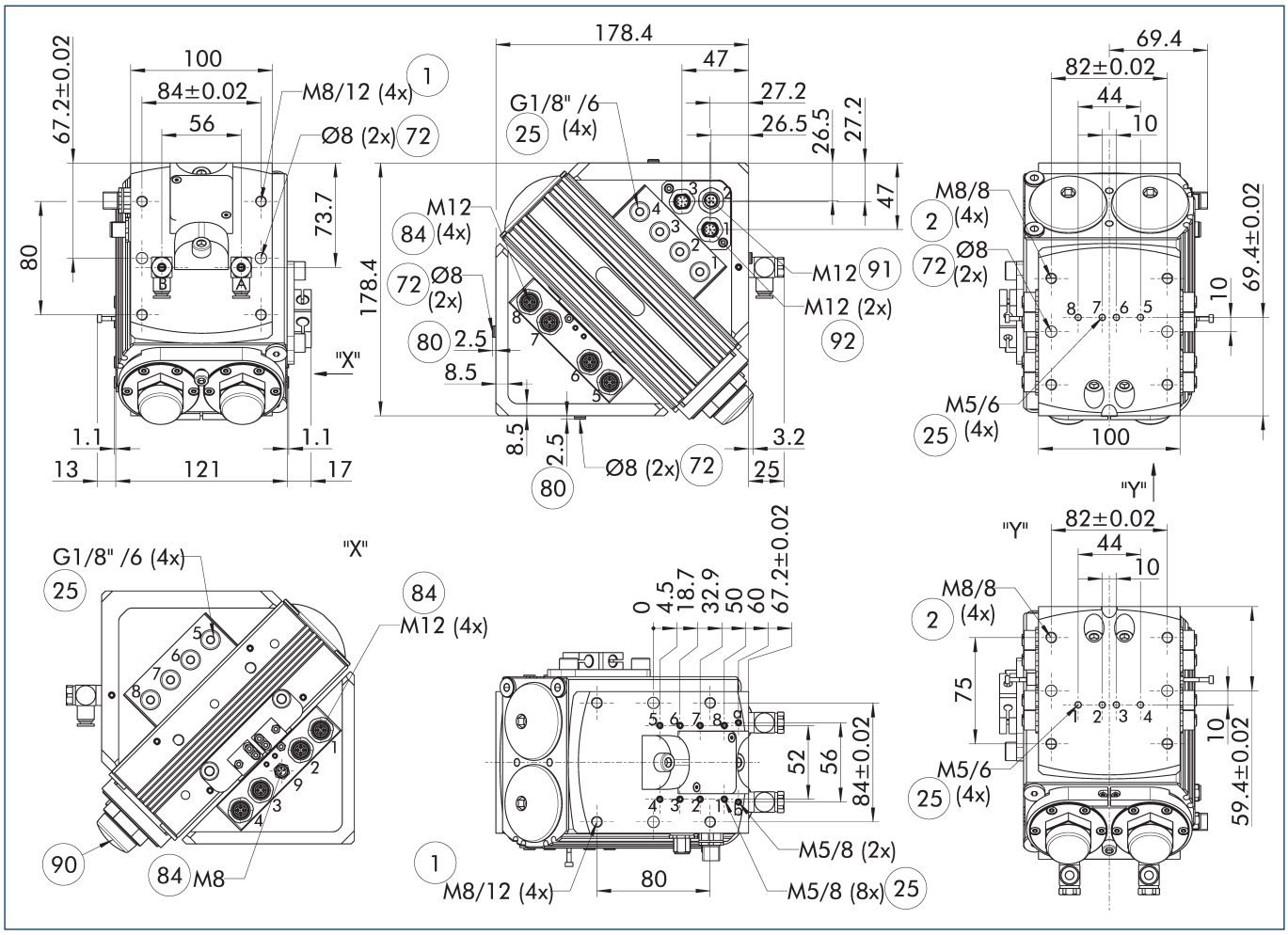

The main view shows the SRH-plus-D swivel head in the left end position (0°) and turns 180° clockwise. (when viewing the output side)

ⓘ The SDV-P pressure maintenance valve can be used to maintain the position in the case of a loss of pressure (see "Accessories" catalog section).

A, a Main / direct connection, rotary actuator rotates clockwise

B, b Main / direct connection, rotary actuator rotates counterclockwise

(1) Connection swivel unit

(2) Attachment connection

(25) Fluid feed-through

(72) Fit for centering sleeves

(80) Depth of the centering sleeve hole in the counter part

(84) Input for 4 pole sensor feed-through

(90) Cover caps

(91) Output for a 4-pin sensor feed-through

(92) Output for an 8-pin sensor feed-through

One-sided loading

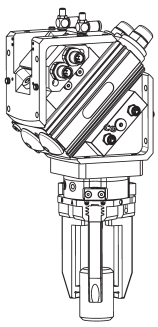

Two-sided loading

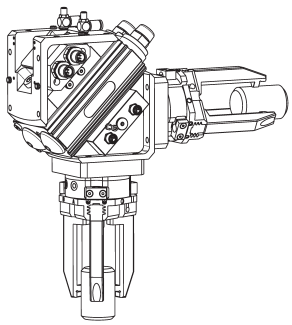

SRH-plus-D 40

Universal swivel head

Hose-free direct connection M5

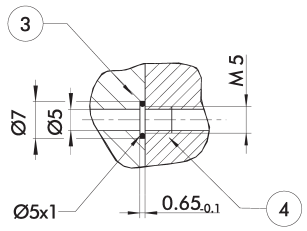

(3) Adapter (4) Rotary unit

The direct connection is used for supplying compressed air without hoses. Instead, the pressure medium is fed through bore-holes in the mounting plate.

Inductive proximity switches

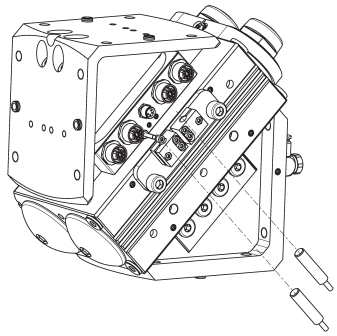

Description	ID	Often combined
Inductive proximity switches		
IN 80-S-M12	0301578	
IN 80-S-M8	0301478	●
IN-C 80-S-M8-PNP	0301475	
INK 80-S	0301550	
INK 80-SL	0301579	
Inductive proximity switch with lateral cable outlet		
IN 80-S-M12-SA	0301587	
IN 80-S-M8-SA	0301483	●
INK 80-S-SA	0301566	
Connection cables		
KA BG08-L 3P-0300-PNP	0301622	●
KA BG08-L 3P-0500-PNP	0301623	
KA BG12-L 3P-0500-PNP	30016369	
KA BW08-L 3P-0300-PNP	0301594	
KA BW08-L 3P-0500-PNP	0301502	
KA BW12-L 3P-0300-PNP	0301503	
KA BW12-L 3P-0500-PNP	0301507	
clip for plug/socket		
CLI-M12	0301464	
CLI-M8	0301463	
Cable extension		
KV BG12-SG12 3P-0030-PNP	0301999	
KV BG12-SG12 3P-0060-PNP	0301998	
KV BW08-SG08 3P-0030-PNP	0301495	
KV BW08-SG08 3P-0100-PNP	0301496	
KV BW08-SG08 3P-0200-PNP	0301497	●
KV BW12-SG12 3P-0030-PNP	0301595	
KV BW12-SG12 3P-0100-PNP	0301596	
KV BW12-SG12 3P-0200-PNP	0301597	
Sensor distributor		
V2-M12	0301776	●
V2-M8	0301775	●
V4-M8	0301746	
V8-M8	0301751	

ⓘ Two sensors (closer/S) are required for each swivel head. On option, extension cables are required.

SRH-plus-D 50

Universal swivel head

Max. admissible inertia J

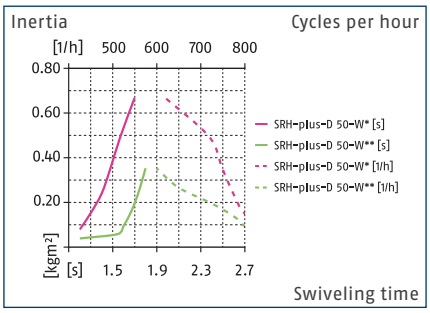

ⓘ The diagrams are valid for applications with a symmetrical design (*) to the swivel axis: one-sided centrically arranged to one mounting face (**), and with an operating pressure of 6 bar. The mass moment of inertia always refers to the swiveling axis. The cycle times can be adjusted via throttling and adjustment of the shock absorber's stroke. Otherwise the lifetime may reduce. On request, we are glad to assist you in designing other applications. Please contact us.

Dimensions and maximum loads

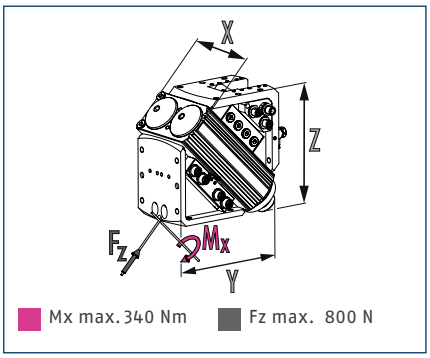

ⓘ The indicated moments and forces are statical values and may appear simultaneously. Throttling has to be done for ensuring that the rotary movement takes place without impact or bouncing. Otherwise the service life reduces.

Technical data

Description		SRH-plus-D 50-W-M8-AS
ID		1407405
Angle of rotation	[°]	180.0
End position adjustability	[°]	3.0
Torque	[Nm]	50.2
IP protection class		67
Weight	[kg]	17.6
Fluid consumption (2x nom. angle)	[cm³]	776.0
Swivel time without a payload	[s]	1.2
Min./nom./max. operating pressure	[bar]	3/6/8
Diameter of connecting hose		6 x 3.9 x 1.05
No. of fluid feed-throughs		8
Max. pressure fluid feed-through	[bar]	8
Min./max. ambient temperature	[°C]	5/60
Repeat accuracy	[°]	0.05
No. of E-fittings on the output end		9
Size of the E-connections on the output end		M8/M12
Max. voltage	[V]	24
Max. current per wire	[A]	1
Max. current	[A]	1
Dimensions X x Y x Z	[mm]	150 x 257.9 x 257.9

ⓘ All units are also available in an FKM version. Please contact us for details.

Main view

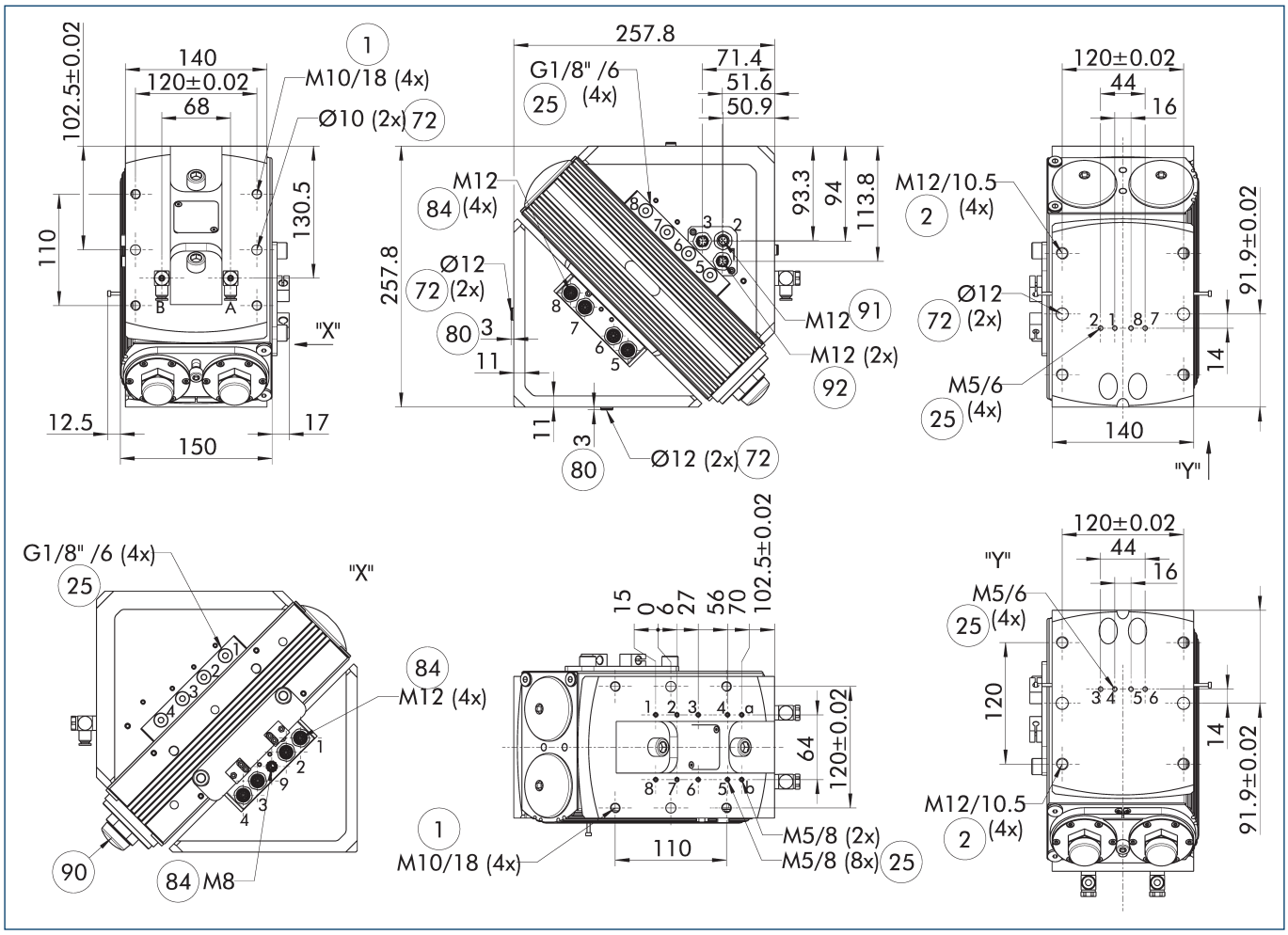

The main view shows the SRH-plus-D swivel head in the left end position (0°) and turns 180° clockwise. (when viewing the output side)

ⓘ The SDV-P pressure maintenance valve can be used to maintain the position in the case of a loss of pressure (see "Accessories" catalog section).

A, a Main / direct connection, rotary actuator rotates clockwise

B, b Main / direct connection, rotary actuator rotates counterclockwise

(1) Connection swivel unit

(2) Attachment connection

(25) Fluid feed-through

(72) Fit for centering sleeves

(80) Depth of the centering sleeve hole in the counter part

(84) Input for 4 pole sensor feed-through

(90) Cover caps

(91) Output for a 4-pin sensor feed-through

(92) Output for an 8-pin sensor feed-through

One-sided loading

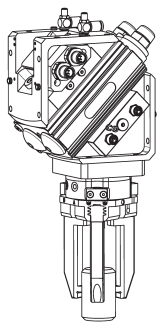

Two-sided loading

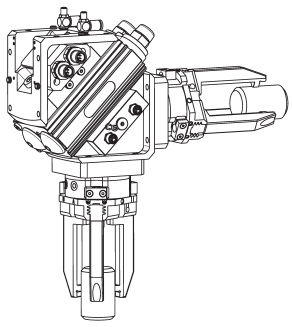

SRH-plus-D 50

Universal swivel head

Hose-free direct connection M5

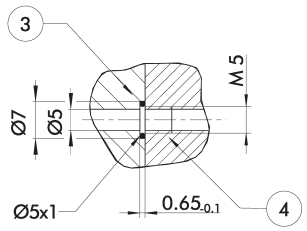

③ Adapter ④ Rotary unit

The direct connection is used for supplying compressed air without hoses. Instead, the pressure medium is fed through bore-holes in the mounting plate.

Inductive proximity switches

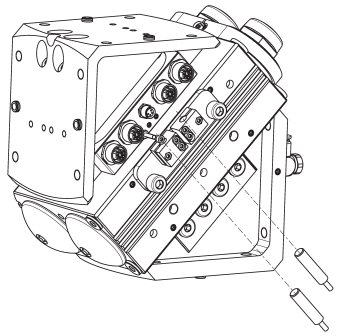

Description	ID	Often combined
Inductive proximity switches		
IN 80-S-M12	0301578	
IN 80-S-M8	0301478	●
IN-C 80-S-M8-PNP	0301475	
INK 80-S	0301550	
INK 80-SL	0301579	
Inductive proximity switch with lateral cable outlet		
IN 80-S-M12-SA	0301587	
IN 80-S-M8-SA	0301483	●
INK 80-S-SA	0301566	
Connection cables		
KA BG08-L 3P-0300-PNP	0301622	●
KA BG08-L 3P-0500-PNP	0301623	
KA BG12-L 3P-0500-PNP	30016369	
KA BW08-L 3P-0300-PNP	0301594	
KA BW08-L 3P-0500-PNP	0301502	
KA BW12-L 3P-0300-PNP	0301503	
KA BW12-L 3P-0500-PNP	0301507	
clip for plug/socket		
CLI-M12	0301464	
CLI-M8	0301463	
Cable extension		
KV BG12-SG12 3P-0030-PNP	0301999	
KV BG12-SG12 3P-0060-PNP	0301998	
KV BW08-SG08 3P-0030-PNP	0301495	
KV BW08-SG08 3P-0100-PNP	0301496	
KV BW08-SG08 3P-0200-PNP	0301497	●
KV BW12-SG12 3P-0030-PNP	0301595	
KV BW12-SG12 3P-0100-PNP	0301596	
KV BW12-SG12 3P-0200-PNP	0301597	
Sensor distributor		
V2-M12	0301776	●
V2-M8	0301775	●
V4-M8	0301746	
V8-M8	0301751	

ⓘ Two sensors (closer/S) are required for each swivel head. On option, extension cables are required.

SRH-plus-D 60

Universal swivel head

Max. admissible inertia J

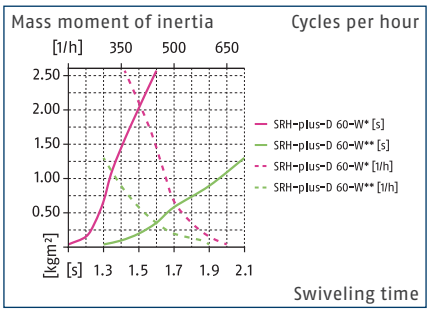

ⓘ The diagrams are valid for applications with a symmetrical design (*) to the swivel axis: one-sided centrically arranged to one mounting face (**), and with an operating pressure of 6 bar. The mass moment of inertia always refers to the swiveling axis. The cycle times can be adjusted via throttling and adjustment of the shock absorber's stroke. Otherwise the lifetime may reduce. On request, we are glad to assist you in designing other applications. Please contact us.

Dimensions and maximum loads

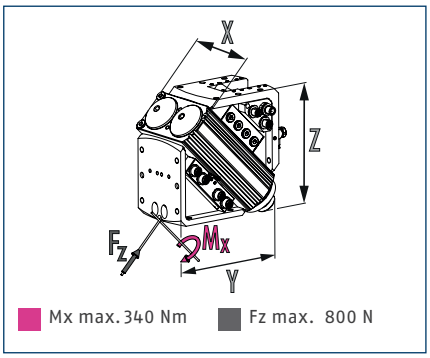

ⓘ The indicated moments and forces are statical values and may appear simultaneously. Throttling has to be done for ensuring that the rotary movement takes place without impact or bouncing. Otherwise the service life reduces.

Technical data

Description		SRH-plus-D 60-W-M8-AS
ID		1407409
Angle of rotation	[°]	180.0
End position adjustability	[°]	3.0
Torque	[Nm]	69.9
IP protection class		67
Weight	[kg]	21.2
Fluid consumption (2x nom. angle)	[cm³]	1120.0
Swivel time without a payload	[s]	1.3
Min./nom./max. operating pressure	[bar]	3/6/8
Diameter of connecting hose		6 x 3.9 x 1.05
No. of fluid feed-throughs		8
Max. pressure fluid feed-through	[bar]	8
Min./max. ambient temperature	[°C]	5/60
Repeat accuracy	[°]	0.05
No. of E-fittings on the output end		9
Size of the E-connections on the output end		M8/M12
Max. voltage	[V]	24
Max. current per wire	[A]	1
Max. current	[A]	1
Dimensions X x Y x Z	[mm]	174 x 268.8 x 268.8

ⓘ All units are also available in an FKM version. Please contact us for details.

Main view

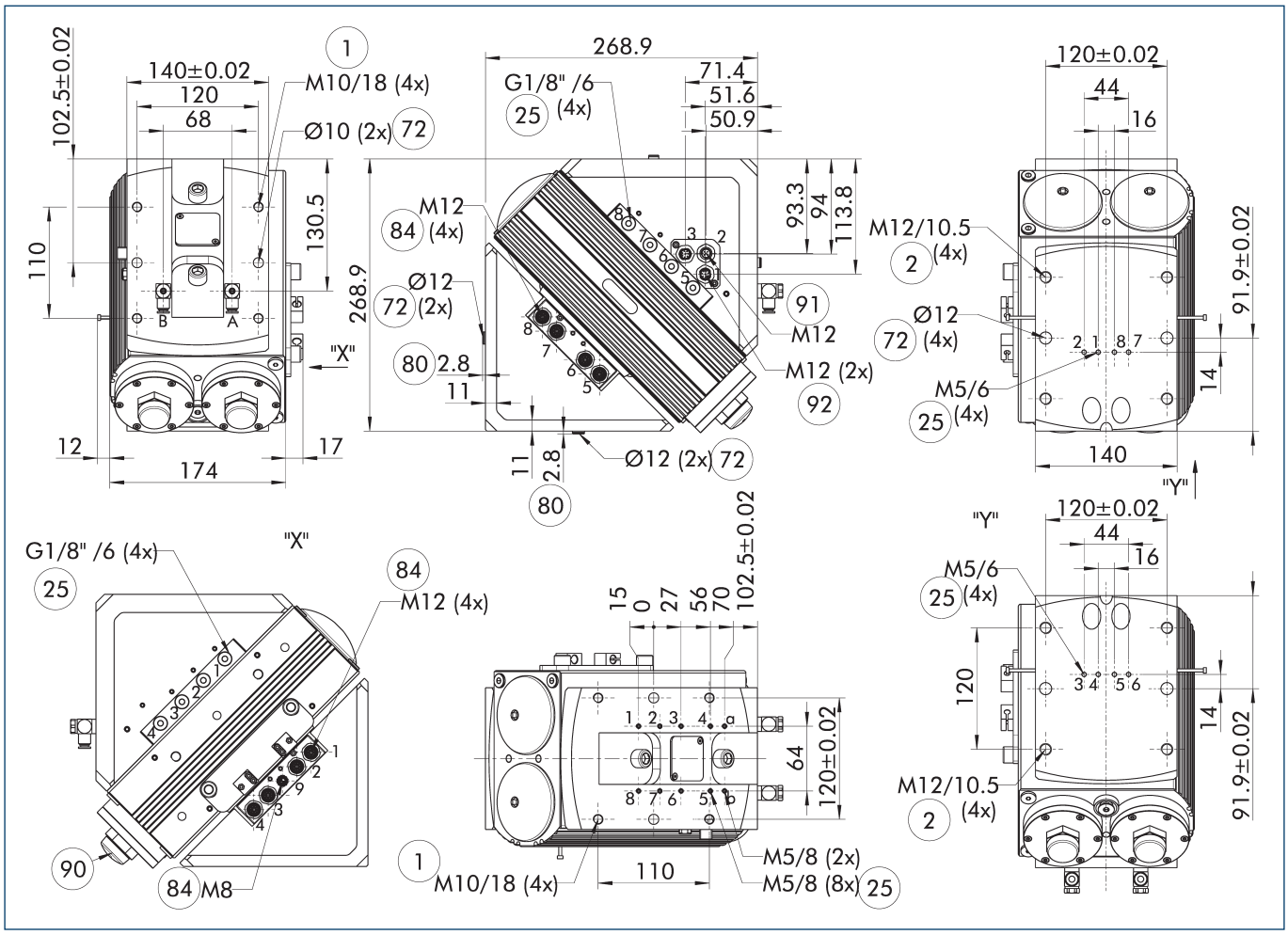

The main view shows the SRH-plus-D swivel head in the left end position (0°) and turns 180° clockwise. (when viewing the output side)

ⓘ The SDV-P pressure maintenance valve can be used to maintain the position in the case of a loss of pressure (see "Accessories" catalog section).

A, a Main / direct connection, rotary actuator rotates clockwise

B, b Main / direct connection, rotary actuator rotates counterclockwise

(1) Connection swivel unit

(2) Attachment connection

(25) Fluid feed-through

(72) Fit for centering sleeves

(80) Depth of the centering sleeve hole in the counter part

(84) Input for 4 pole sensor feed-through

(90) Cover caps

(91) Output for a 4-pin sensor feed-through

(92) Output for an 8-pin sensor feed-through

One-sided loading

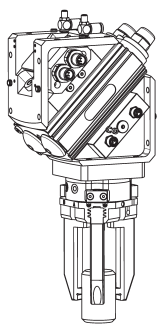

Two-sided loading

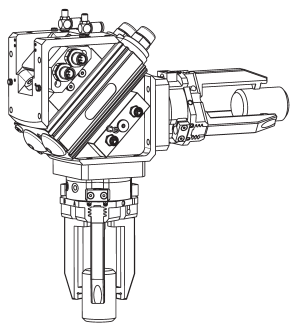

SRH-plus-D 60

Universal swivel head

Hose-free direct connection M5

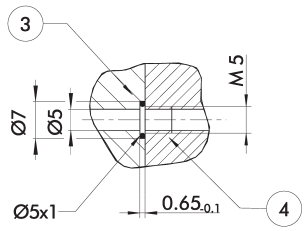

③ Adapter ④ Rotary unit

The direct connection is used for supplying compressed air without hoses. Instead, the pressure medium is fed through bore-holes in the mounting plate.

Inductive proximity switches

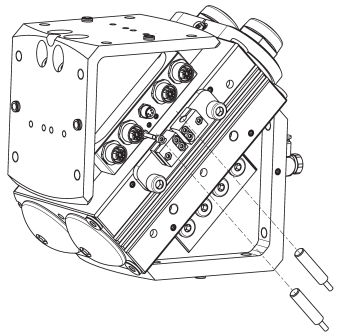

Description	ID	Often combined
Inductive proximity switches		
IN 80-S-M12	0301578	
IN 80-S-M8	0301478	●
IN-C 80-S-M8-PNP	0301475	
INK 80-S	0301550	
INK 80-SL	0301579	
Inductive proximity switch with lateral cable outlet		
IN 80-S-M12-SA	0301587	
IN 80-S-M8-SA	0301483	●
INK 80-S-SA	0301566	
Connection cables		
KA BG08-L 3P-0300-PNP	0301622	●
KA BG08-L 3P-0500-PNP	0301623	
KA BG12-L 3P-0500-PNP	30016369	
KA BW08-L 3P-0300-PNP	0301594	
KA BW08-L 3P-0500-PNP	0301502	
KA BW12-L 3P-0300-PNP	0301503	
KA BW12-L 3P-0500-PNP	0301507	
clip for plug/socket		
CLI-M12	0301464	
CLI-M8	0301463	
Cable extension		
KV BG12-SG12 3P-0030-PNP	0301999	
KV BG12-SG12 3P-0060-PNP	0301998	
KV BW08-SG08 3P-0030-PNP	0301495	
KV BW08-SG08 3P-0100-PNP	0301496	
KV BW08-SG08 3P-0200-PNP	0301497	●
KV BW12-SG12 3P-0030-PNP	0301595	
KV BW12-SG12 3P-0100-PNP	0301596	
KV BW12-SG12 3P-0200-PNP	0301597	
Sensor distributor		
V2-M12	0301776	●
V2-M8	0301775	●
V4-M8	0301746	
V8-M8	0301751	

ⓘ Two sensors (closer/S) are required for each swivel head. On option, extension cables are required.

SCHUNK GmbH & Co. KG
Spann- und Greiftechnik

Bahnhofstr. 106 - 134
D-74348 Lauffen/Neckar
Tel. +49-7133-103-0
Fax +49-7133-103-2399
info@de.schunk.com
schunk.com

Folgen Sie uns | *Follow us*

2023-01-20 © 2023 SCHUNK GmbH & Co. KG