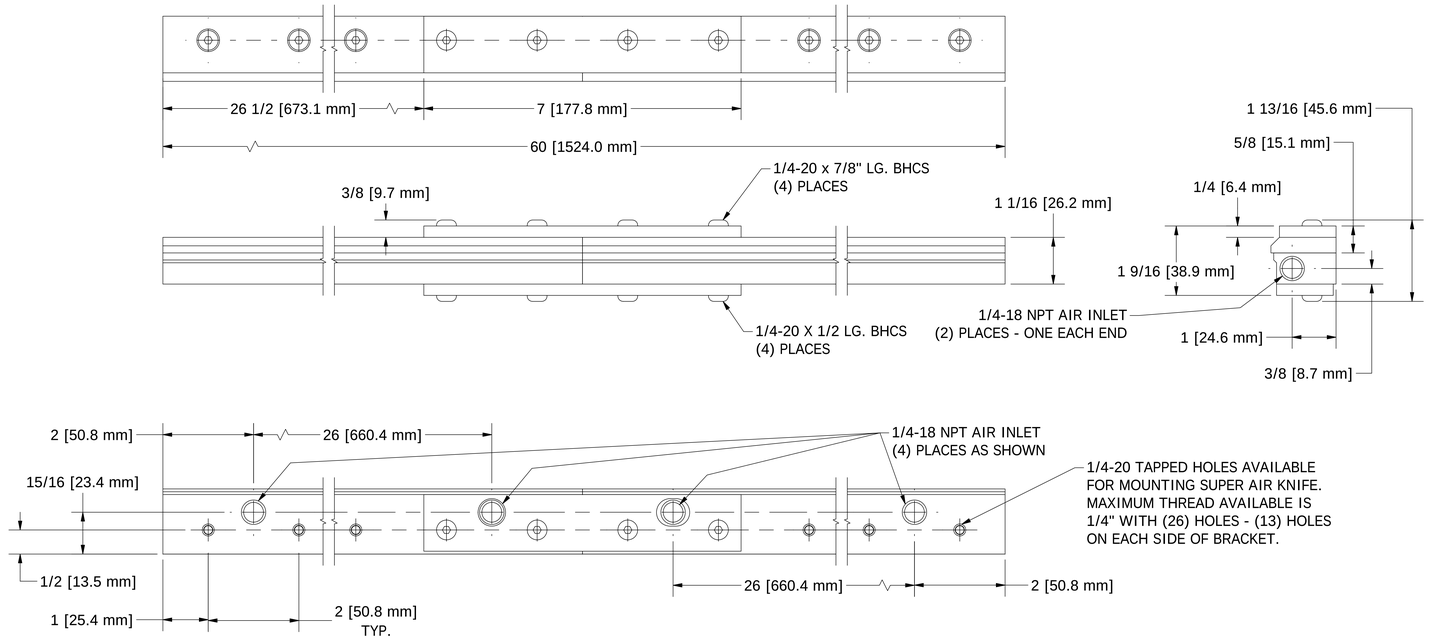

COPYRIGHT 2009 - EXAIR CORPORATION

EXAIR CORPORATION

TITLE		
60 IN. ST.ST. SUPER AIR KNIFE		
DATE	DRAWING NUMBER	SCALE
11/24/09	DIM-110060SS	1:2